# CW/SSB TRANSCEIVER 0.05-30 MHz DIGITAL 2004
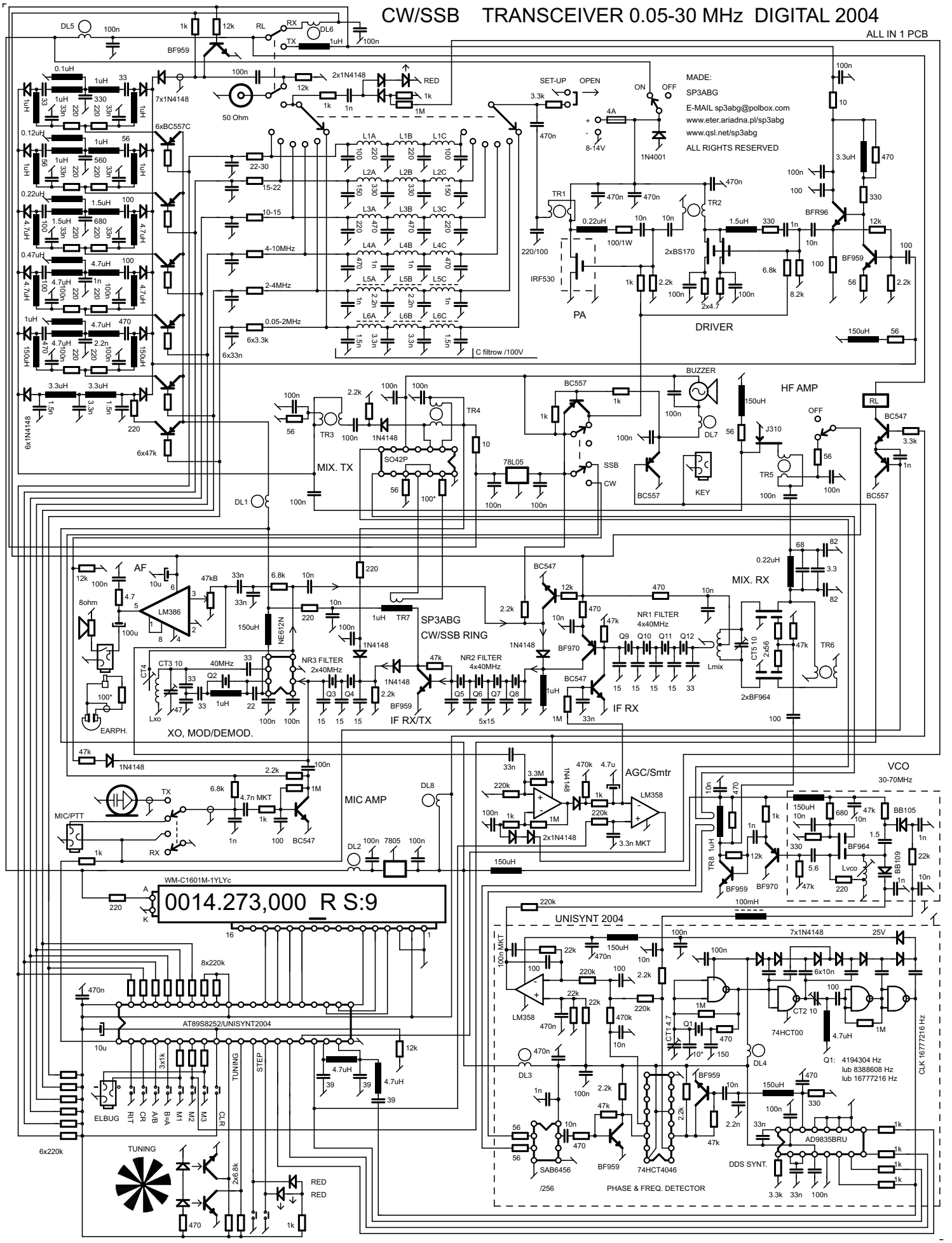
ALL IN 1 PCB